Quelle TECHNISCHER KUNDENDIENST

Technische Unterlage

Best.-Nr.:
103.472 7
103.560 9

Schaltbild Leiterplatten:

CTV 1405 R

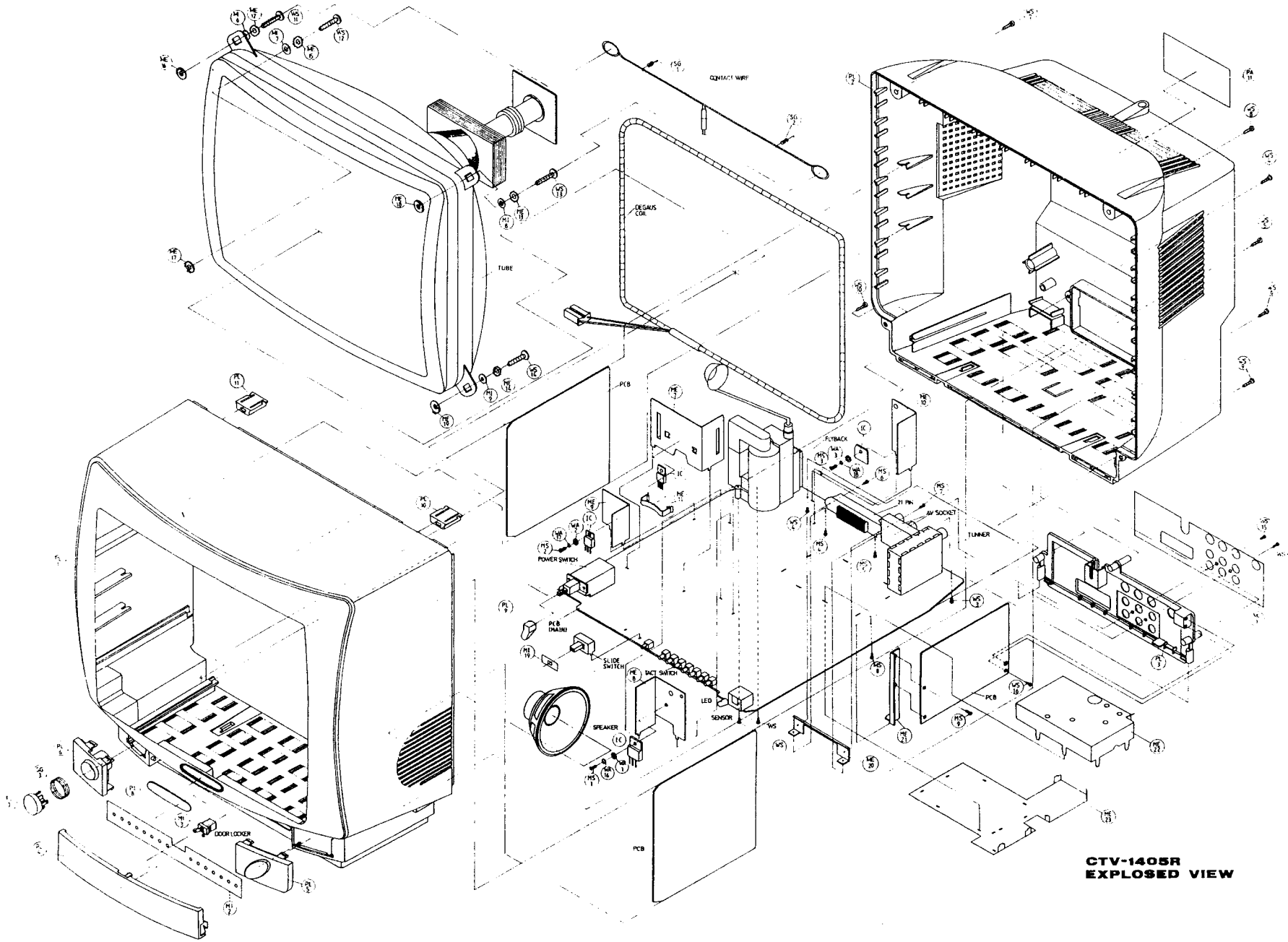

CTV-1405R
EXPLOSED VIEW

F HANDSET CIRCUIT (PB-HS-SGS)

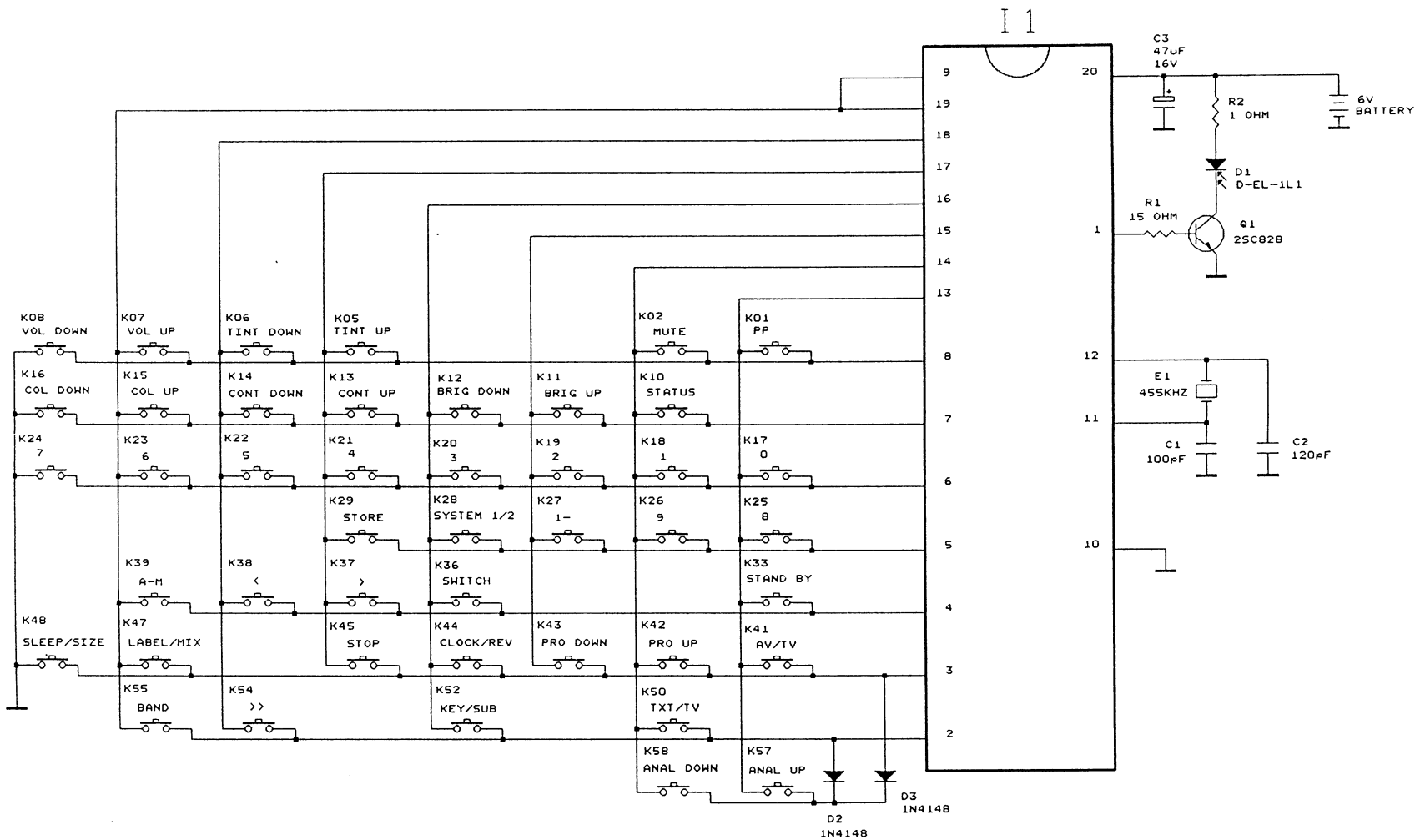

REF: HS-SGS 120194

COMPONENT DIAGRAM

COMPONENT SIDE

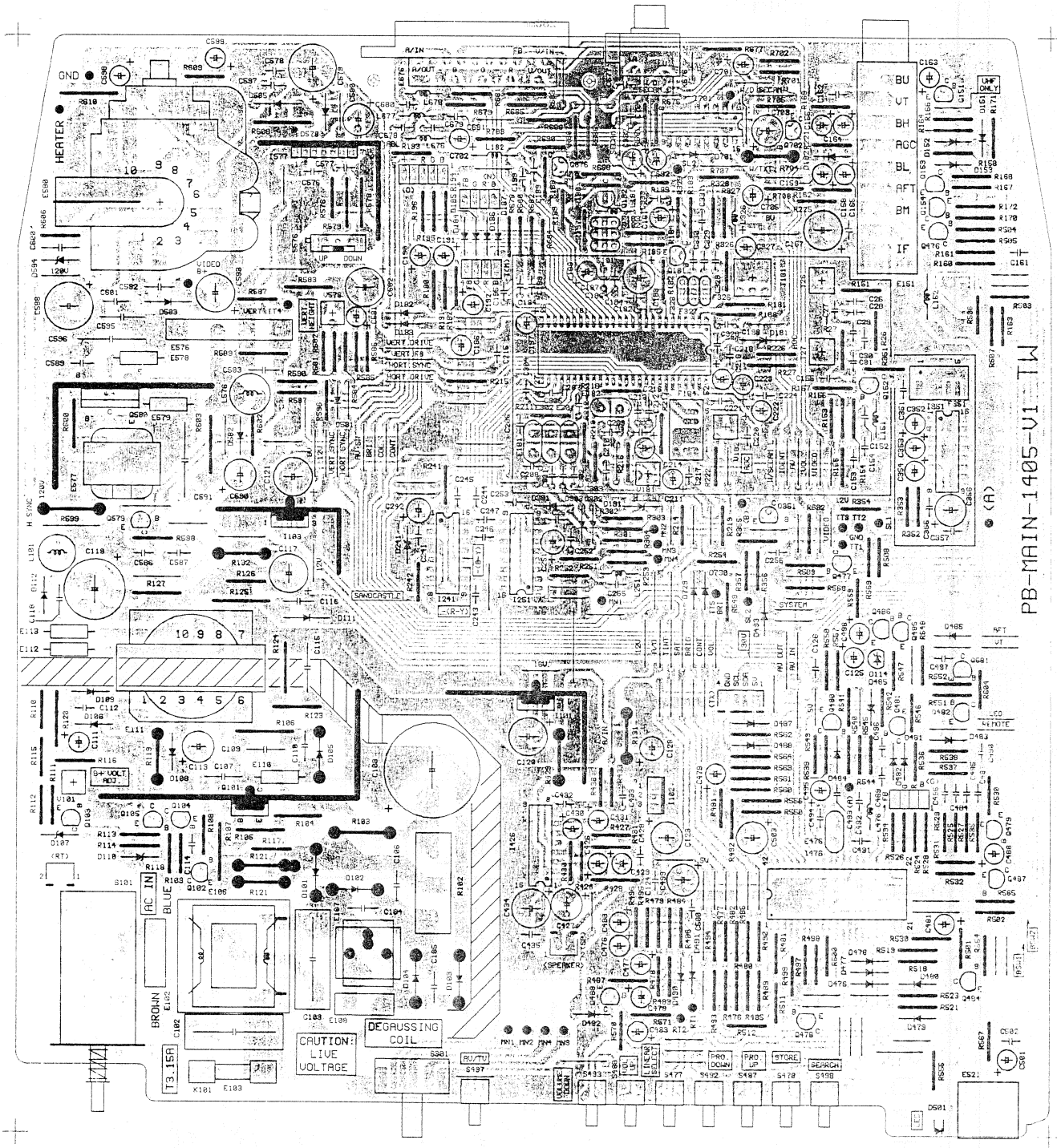

COMPONENT DIAGRAM

COMPONENT SIDE

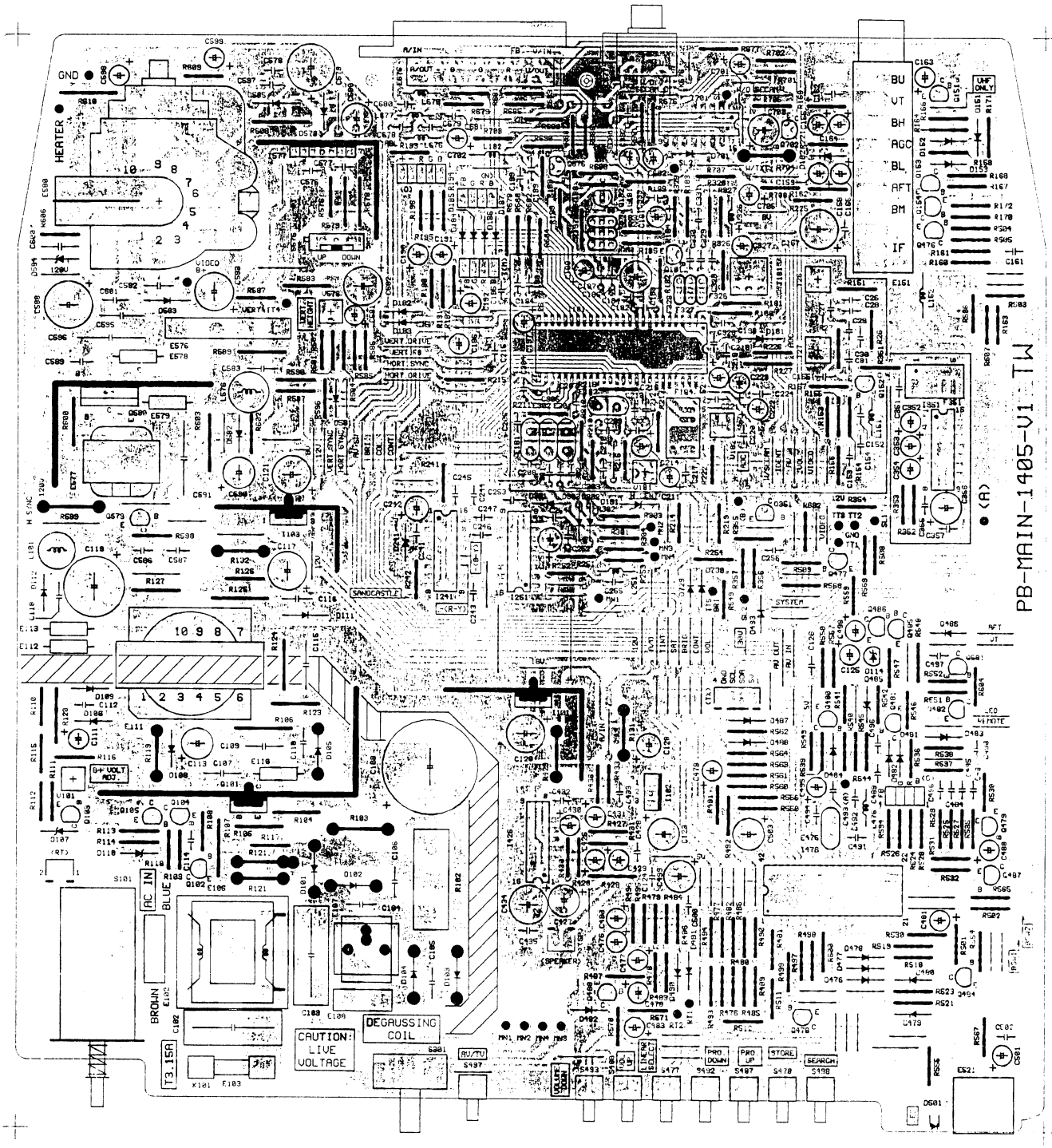

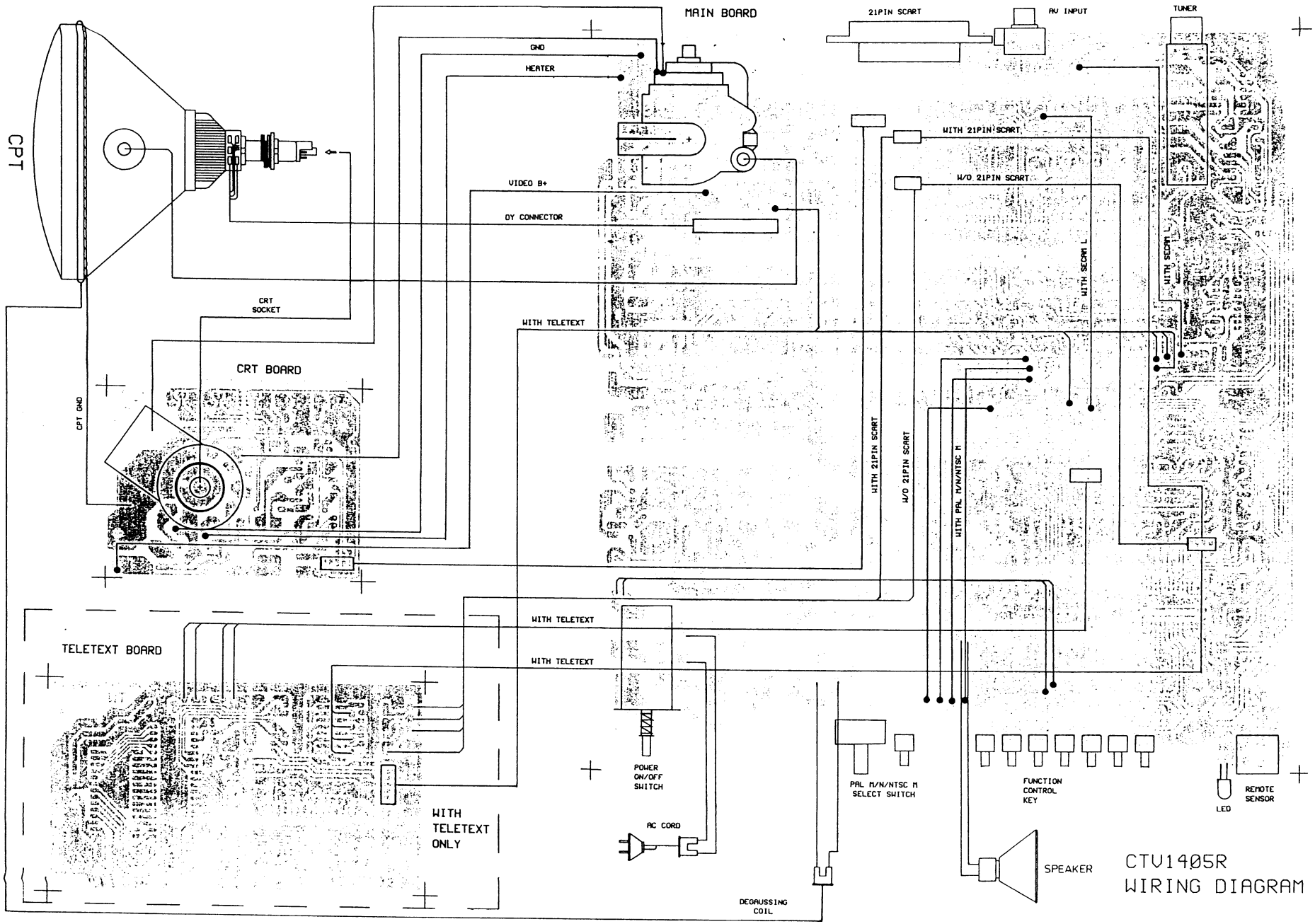
CPT
MAIN BOARD
21PIN SCART
AV INPUT
TUNER
GND
HEATER
VIDEO B+
DY CONNECTOR
WITH 21PIN SCART
W/O 21PIN SCART
WITH SECAM L
CRT SOCKET
WITH TELETEXT
CRT BOARD
CPT GND
WITH 21PIN SCART
W/O 21PIN SCART
WITH PAL M/N/NTSC M
TELETEXT BOARD
WITH TELETEXT
WITH TELETEXT
POWER ON/OFF SWITCH
AC CORD
WITH TELETEXT ONLY
PAL M/N/NTSC M SELECT SWITCH
FUNCTION CONTROL KEY
LED
REMOTE SENSOR
SPEAKER
DEGAUSSING COIL
CTV1405R
WIRING DIAGRAM

ALIGNMENT CONDITION :

1. Input signal strength ..... 80dBu.
2. Power supply AC input ..... 220V.

ALIGNMENT PROCEDURES :

1. *AGC ALIGNMENT*
a) Receive the signal of VHF high channel.
b) Set the input signal strength in 60±2dB.
c) Adjust V182 to point where noise is disappeared.
d) Increase the input signal in 2dB and confirm AGC voltage.

2. *VERTICAL HEIGHT ADJUSTMENT*
a) Receive RETOMA pattern.
b) Adjust V576 to obtain a normal picture.

3. *HORIZONTAL CENTER ADJUSTMENT*
a) Receive REMOTA pattern.
b) Adjust V181 to obtain th normal picture.

4. *WHITE BALANCE ADJUSTMENT*
a) Receive a " GREY SCALE " pattern.
b) Turn the " CUT OFF " (VR51, VR52, VR54) and " DRIVE " (VR53, VR55) to middle position.
c) Set BRIGHTNESS, CONTRAST and COLOUR controls to minimum position.
d) Slowly turn the SCREEN control on the FBT to a position where just a vertical bar illuminates on the CPT.
e) The " CUT OFF " control volume which used to control the first color appeared on the vertical bar needs no further adjustment. Turn the rest of " CUT OFF " controls to achieve a " WHITE " raster. For example, if red color appears on the screen display, use the GREEN and BLUE " CUT OFF " controls to adjust the screen display until it becomes white.
f) Set BRIGHTNESS and CONTRAST controls to maximum position.
g) Adjust GREEN and BLUE " DRIVE " controls (VR53, VR55) to obtain a uniform " WHITE " raster.
h) Set BRIGHTNESS and CONTRAST controls to minimum position.
i) Repeat step 5 to step 7 one more time.
j) Check the BLACK and WHITE picture detail from proper BLACK and WHITE condition (no coloration) from low light to high light and all brightness for proper tracking.
Proper tracking at all brightness level can be obtained when the SCREEN control, " CUT OFF " controls and " DRIVE " controls are properly adjusted. If the results are unsatisfactory, repeat from the beginning.

5. *FOCUS ADJUSTMENT*
a) Set CONTRAST controls to maximum position and BRIGHTNESS controls to the middle position.
b) Adjust FOCUS controls on the FBT to obtain a sharpest and clearest picture on the CPT.

COMPONENT DIAGRAM

COMPONENT SIDE

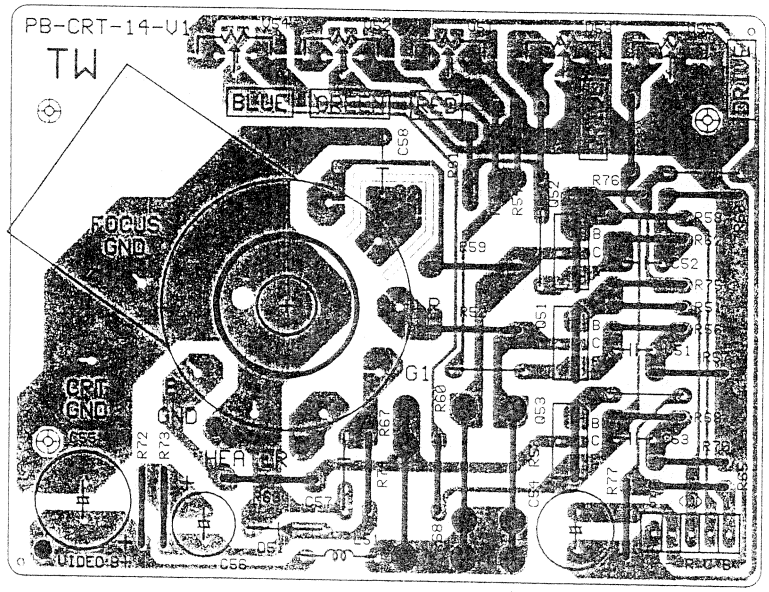

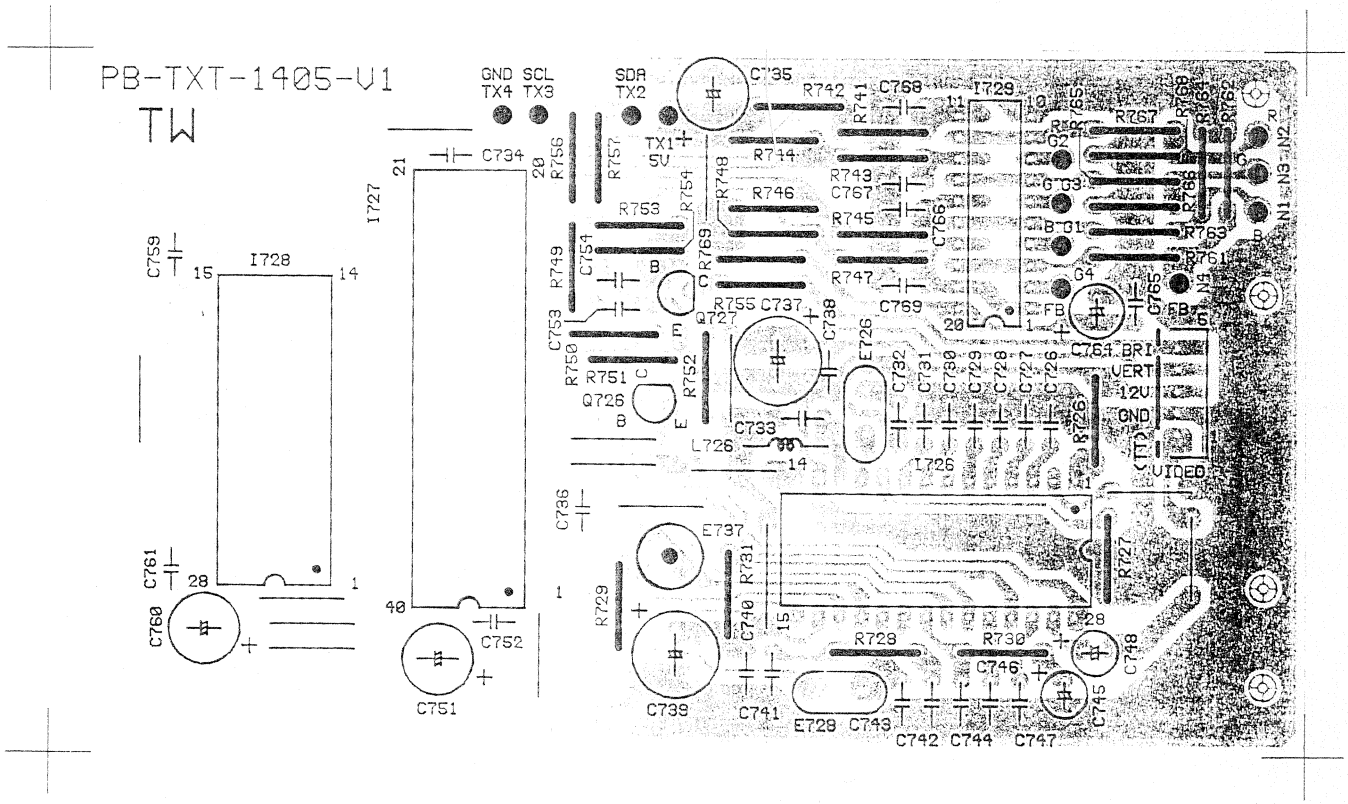

14" (1405) TELETEXT CIRCUIT

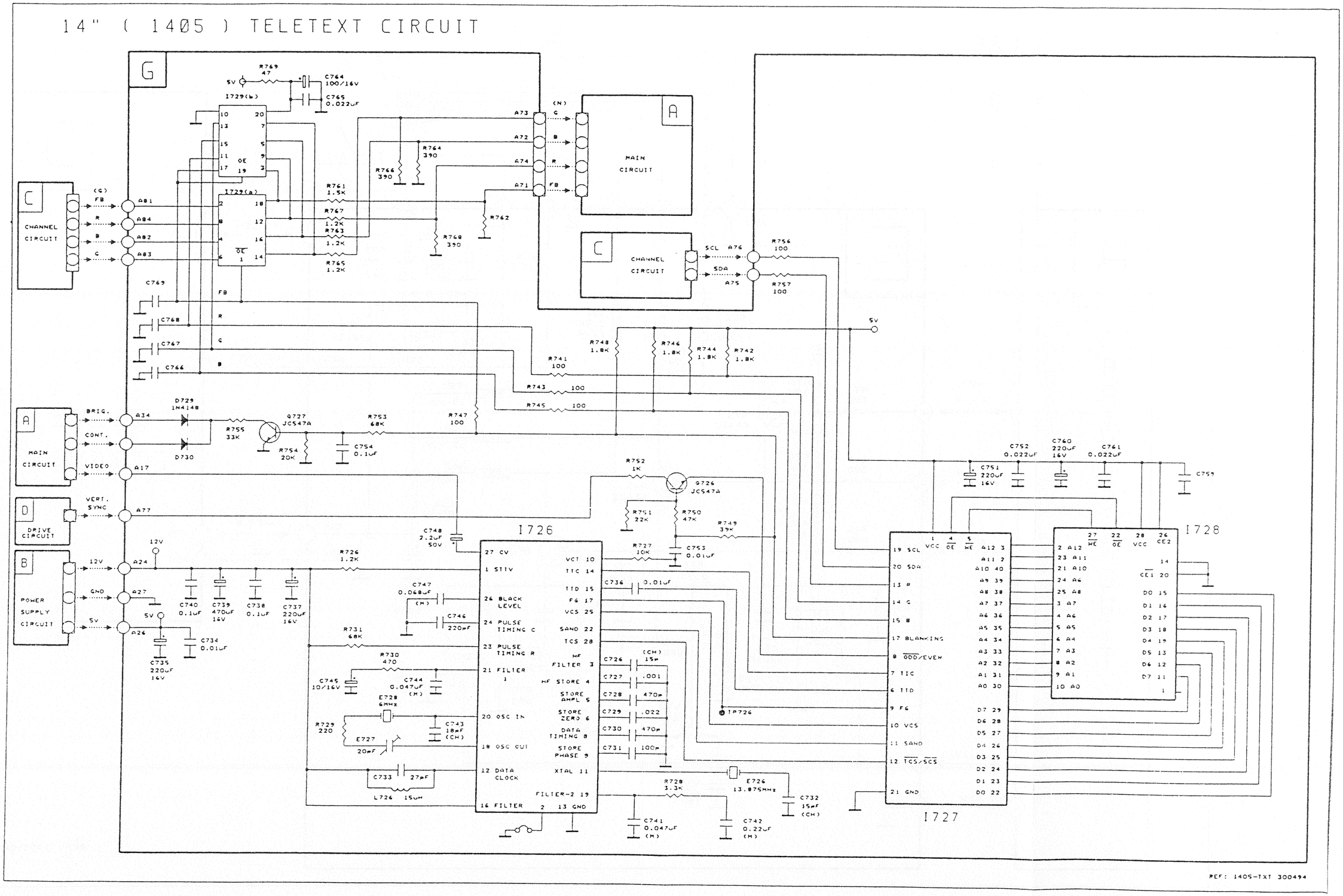

14" (1405)

CRT CIRCUIT

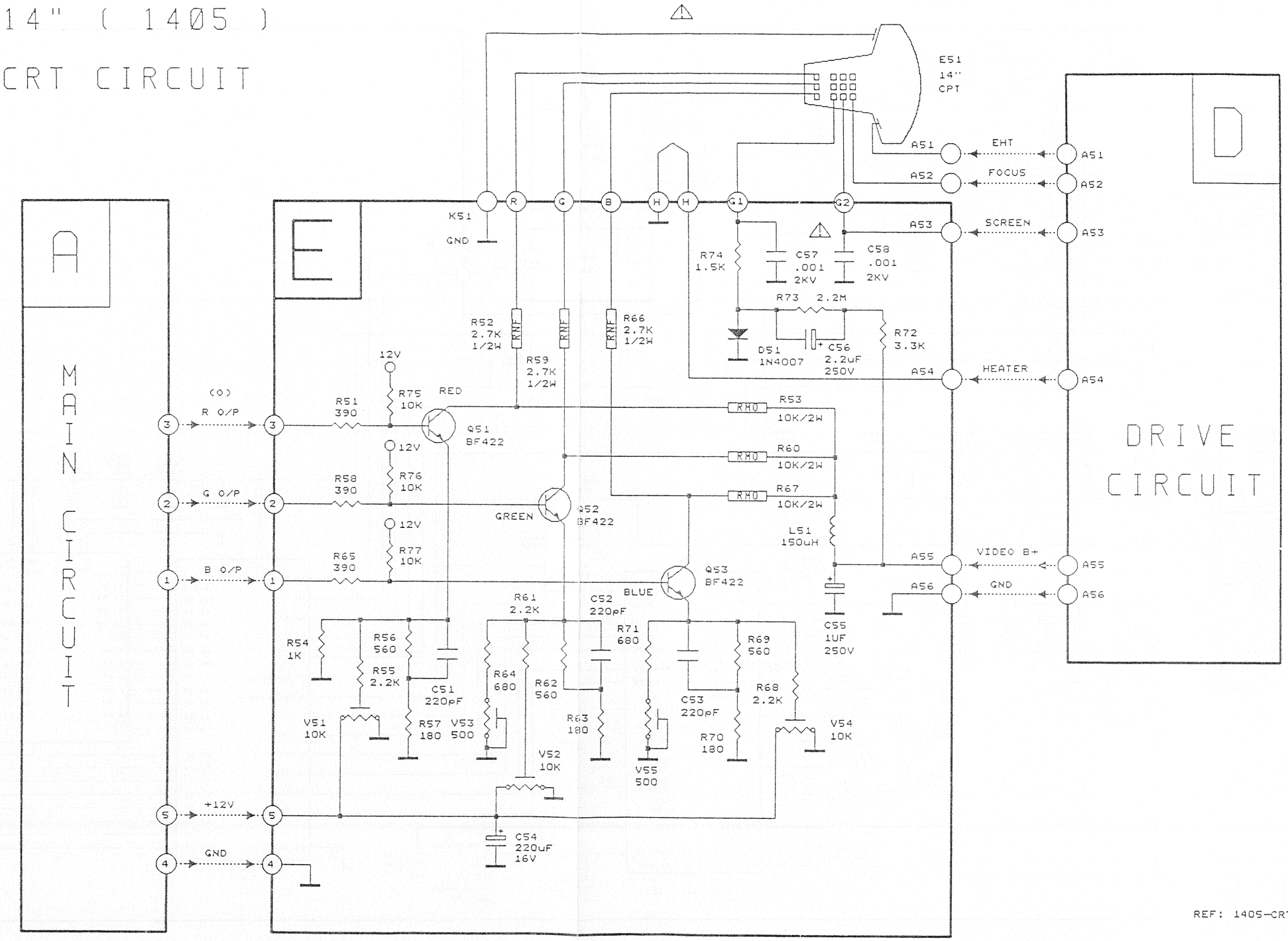

B

1405 POWER SUPPLY CIRCUIT

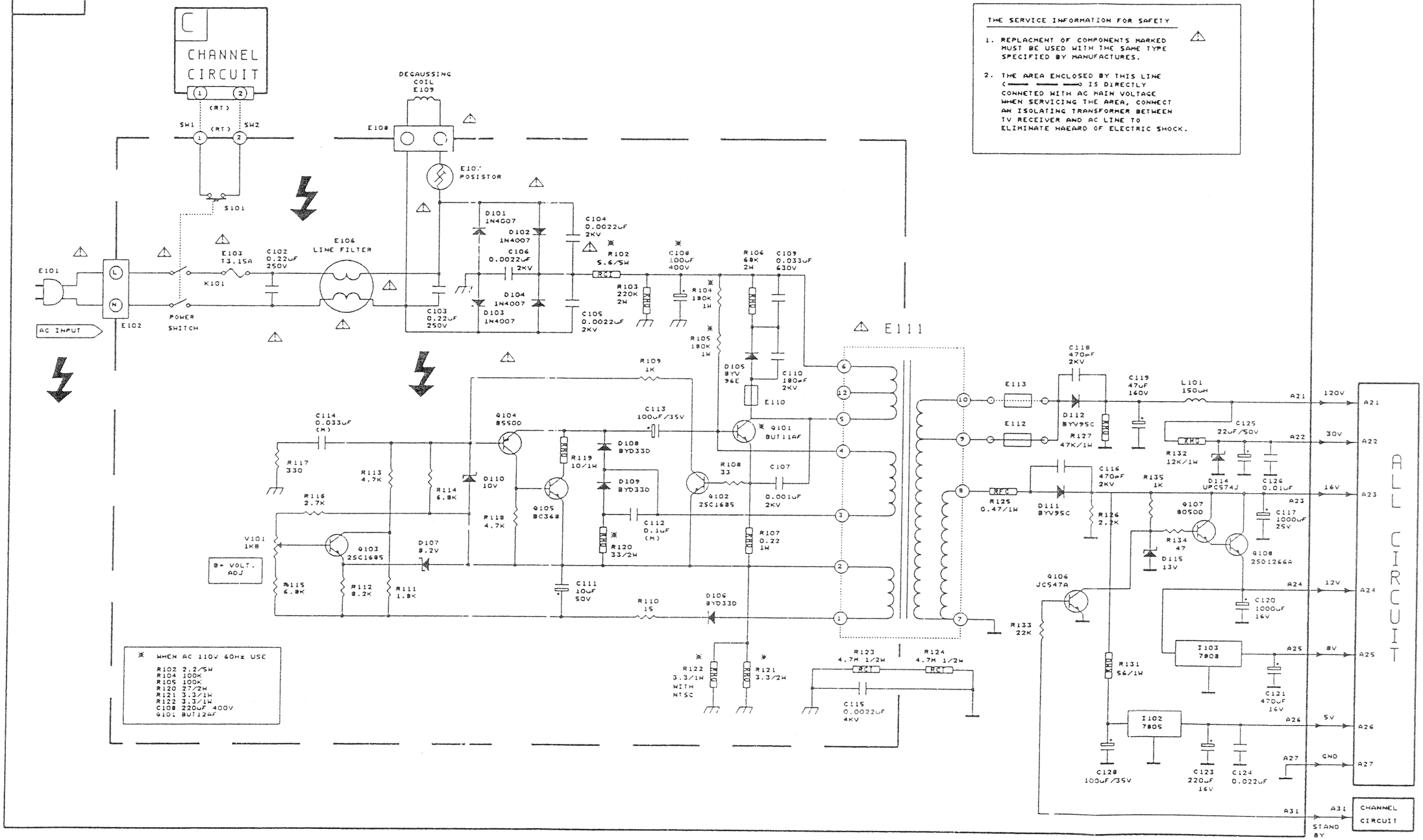

THE SERVICE INFORMATION FOR SAFETY

1. REPLACMENT OF COMPONENTS MARKED ⚠ MUST BE USED WITH THE SAME TYPE SPECIFIED BY MANUFACTURES.
2. THE AREA ENCLOSED BY THIS LINE (——— ——— ———) IS DIRECTLY CONNETED WITH AC MAIN VOLTAGE WHEN SERVICING THE AREA, CONNECT AN ISOLATING TRANSFORMER BETWEEN TV RECEIVER AND AC LINE TO ELIMINATE HAZARD OF ELECTRIC SHOCK.

※ WHEN AC 110V 60Hz USE

R102 2.2/5W
R104 100K
R105 100K
R120 27/2W
R121 3.3/1W
R122 3.3/1W
C108 220uF 400V
Q101 BUT12AF

REF: 1405POWA 110295

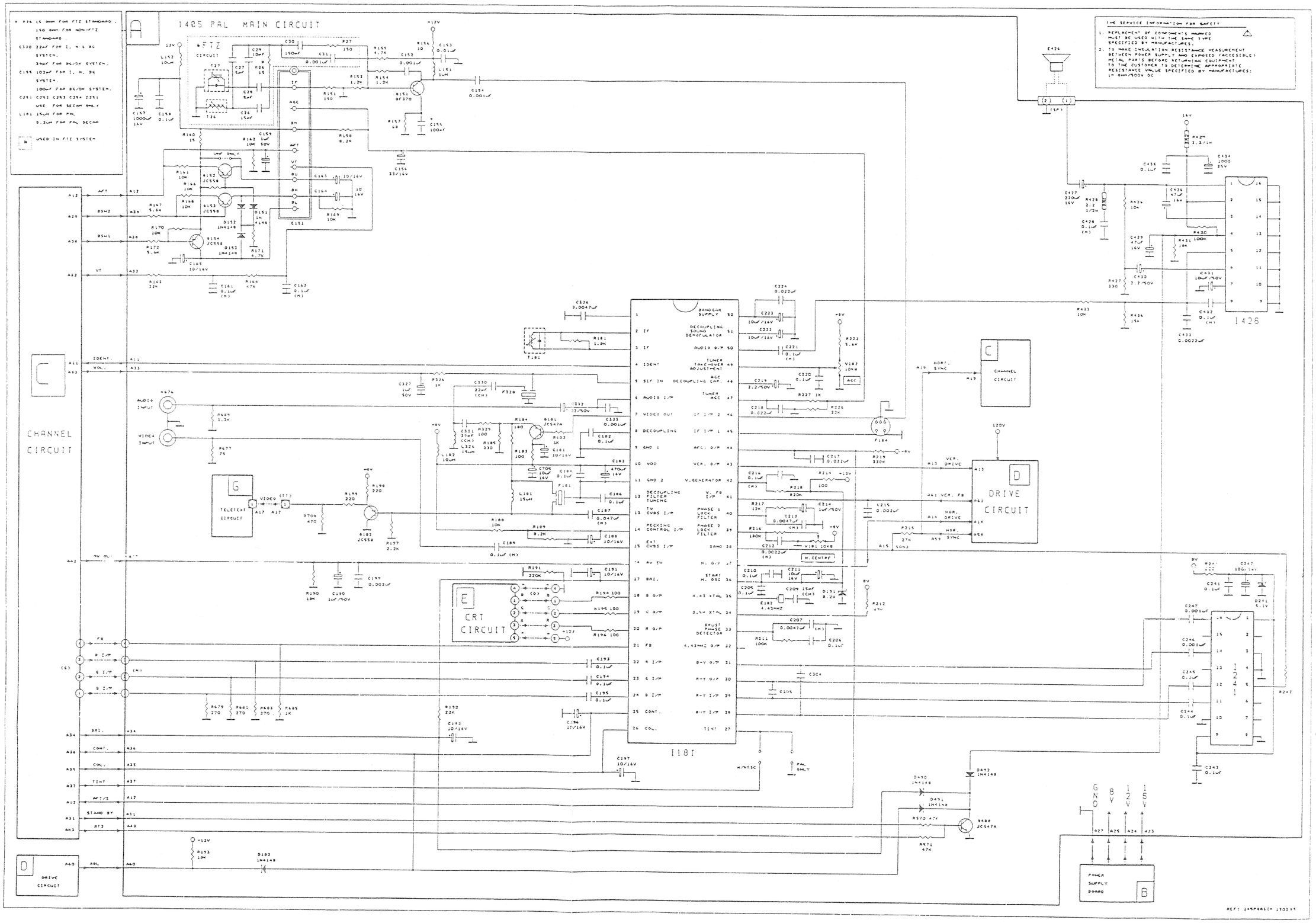

1405 PAL MAIN CIRCUIT
FTZ CIRCUIT
CHANNEL CIRCUIT
TELETEXT CIRCUIT
CRT CIRCUIT
DRIVE CIRCUIT
I181
I426
I241
POWER SUPPLY BOARD
THE SERVICE INFORMATION FOR SAFETY
1. REPLACEMENT OF COMPONENTS MARKED MUST BE USED WITH THE SAME TYPE SPECIFIED BY MANUFACTURES.
2. TO MAKE INSULATION RESISTANCE MEASUREMENT BETWEEN POWER SUPPLY AND EXPOSED (ACCESIBLE) METAL PARTS BEFORE RETURNING EQUIPMENT TO THE CUSTOMER TO DETERMINE APPROPRIATE RESISTANCE VALUE SPECIFIED BY MANUFACTURES: 1M OHM/500V DC

1405 DRIVE CIRCUIT

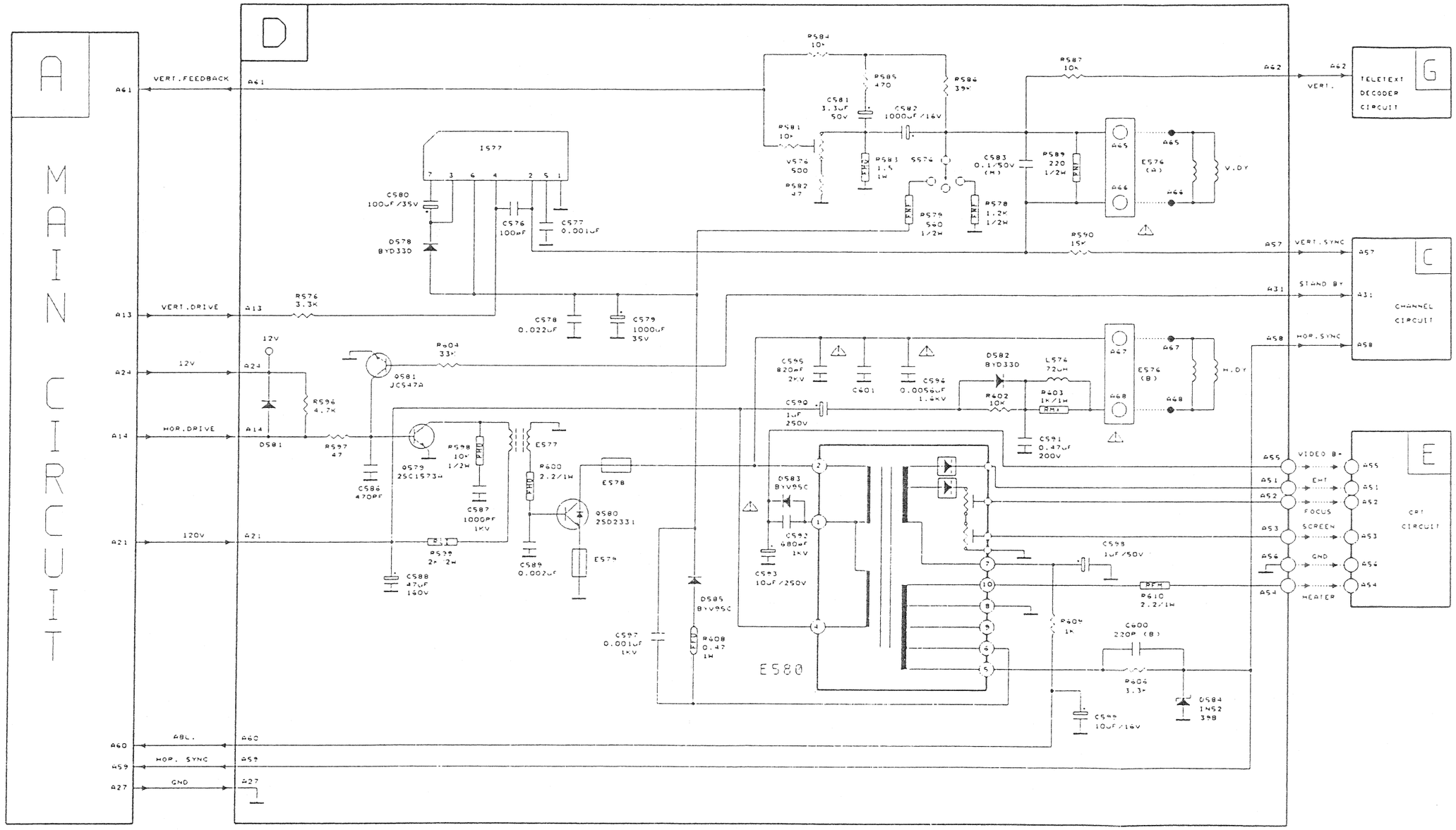

REF: 1405-DRI 300494

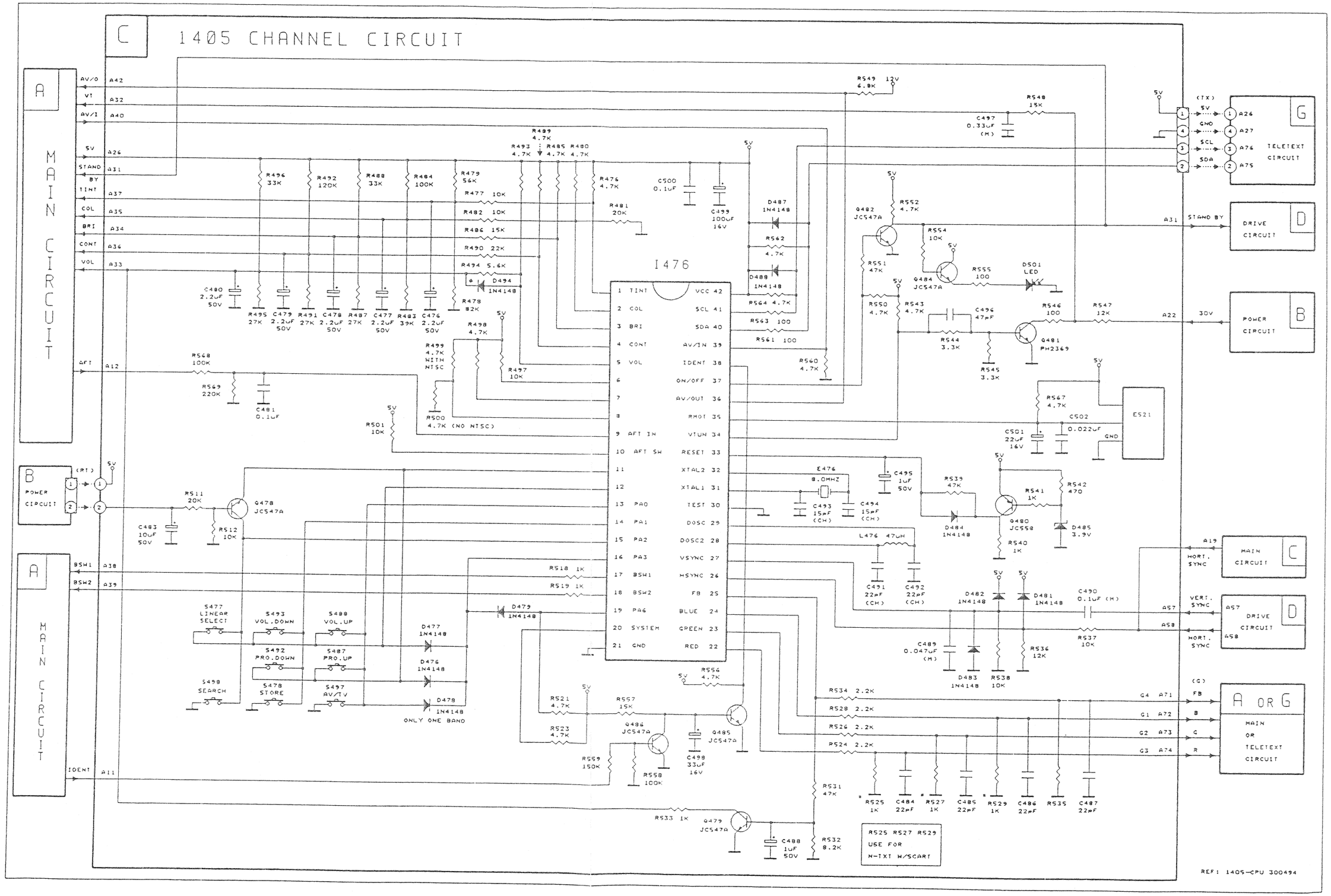
C
1405 CHANNEL CIRCUIT
A
MAIN CIRCUIT
AV/O A42
VT A32
AV/I A40
5V A26
STAND BY A31
TINT A37
COL A35
BRI A34
CONT A36
VOL A33
AFT A12
B
POWER CIRCUIT
(RT)
A
MAIN CIRCUIT
BSW1 A38
BSW2 A39
IDENT A11
I476
1 TINT
2 COL
3 BRI
4 CONT
5 VOL
6
7
8
9 AFT IN
10 AFT SW
11
12
13 PA0
14 PA1
15 PA2
16 PA3
17 BSW1
18 BSW2
19 PA6
20 SYSTEM
21 GND
VCC 42
SCL 41
SDA 40
AV/IN 39
IDENT 38
ON/OFF 37
AV/OUT 36
RMOT 35
VTUN 34
RESET 33
XTAL2 32
XTAL1 31
TEST 30
DOSC 29
DOSC2 28
VSYNC 27
HSYNC 26
FB 25
BLUE 24
GREEN 23
RED 22
R549 6.8K
12V
R548 15K
C497 0.33uF (M)
5V
(TX)
GND
SCL
SDA
A26
A27
A76
A75
G
TELETEXT CIRCUIT
A31
STAND BY
DRIVE CIRCUIT
D
A22
30V
POWER CIRCUIT
B
R489 4.7K
R493 4.7K
R485 4.7K
R480 4.7K
R476 4.7K
C500 0.1uF
C499 100uF 16V
R481 20K
D487 1N4148
R562 4.7K
D488 1N4148
R564 4.7K
R563 100
R561 100
R560 4.7K
R552 4.7K
Q482 JC547A
R554 10K
Q484 JC547A
R555 100
D501 LED
R551 47K
R550 4.7K
R543 4.7K
C496 47pF
R544 3.3K
R545 3.3K
R546 100
R547 12K
Q481 PH2369
R496 33K
R492 120K
R488 33K
R484 100K
R479 56K
R477 10K
R482 10K
R486 15K
R490 22K
R494 5.6K
D494 1N4148
R478 82K
C480 2.2uF 50V
R495 27K
C479 2.2uF 50V
R491 27K
C478 2.2uF 50V
R487 27K
C477 2.2uF 50V
R483 39K
C476 2.2uF 50V
R498 4.7K
R499 4.7K WITH NTSC
R497 10K
R500 4.7K (NO NTSC)
R501 10K
R568 100K
R569 220K
C481 0.1uF
R567 4.7K
C502 0.022uF
C501 22uF 16V
ES21
GND
E476 8.0MHZ
C493 15pF (CH)
C494 15pF (CH)
C495 1uF 50V
R539 47K
D484 1N4148
R541 1K
R542 470
Q480 JC550
D485 3.9V
R540 1K
L476 47uH
C491 22pF (CH)
C492 22pF (CH)
D482 1N4148
D481 1N4148
C490 0.1uF (M)
C489 0.047uF (M)
D483 1N4148
R538 10K
R536 12K
R537 10K
A19
HORI. SYNC
MAIN CIRCUIT
C
A57
VERT. SYNC
A58
HORI. SYNC
DRIVE CIRCUIT
D
(G)
FB
B
G
R
G4 A71
G1 A72
G2 A73
G3 A74
A OR G
MAIN OR TELETEXT CIRCUIT
R534 2.2K
R528 2.2K
R526 2.2K
R524 2.2K
R525 1K
C484 22pF
R527 1K
C485 22pF
R529 1K
C486 22pF
R535
C487 22pF
R511 20K
Q478 JC547A
C483 10uF 50V
R512 10K
R518 1K
R519 1K
D479 1N4148
S477 LINEAR SELECT
S493 VOL.DOWN
S489 VOL.UP
S492 PRO.DOWN
S487 PRO.UP
S498 SEARCH
S478 STORE
S497 AV/TV
D477 1N4148
D476 1N4148
D478 1N4148
ONLY ONE BAND
R556 4.7K
R521 4.7K
R557 15K
R523 4.7K
Q486 JC547A
Q485 JC547A
C498 33uF 16V
R559 150K
R558 100K
R531 47K
R533 1K
Q479 JC547A
C488 1uF 50V
R532 8.2K
R525 R527 R529
USE FOR
N-TXT W/SCART
REF: 1405-CPU 300494